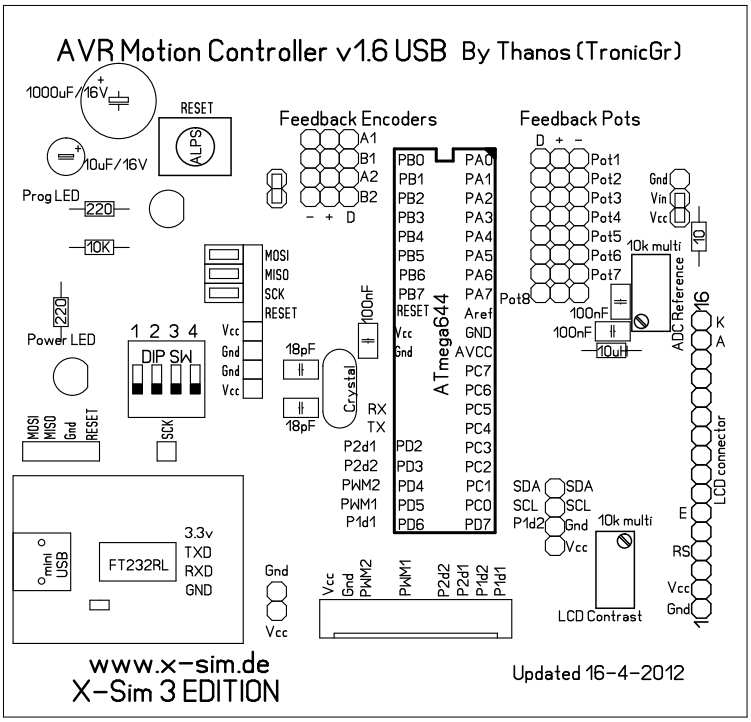
AVR Motion Controller v1.6 USB By Thanos (TronicGr)
1000uF/16V
10uF/16V
RESET
ALPS
Prog LED
220
10K
Power LED
Feedback Encoders
A1
B1
A2
B2
Feedback Pots
D + -
Pot1
Pot2
Pot3
Pot4
Pot5
Pot6
Pot7
Pot8
Gnd
Vin
Vcc
10k multi
ADC Reference
100nF
10uH
MOSI
MISO
SCK
RESET
1 2 3 4
DIP SW
18pF
Crystal
RX
TX
P2d1
P2d2
PWM2
PWM1
P1d1
ATmega644
PB0
PB1
PB2
PB3
PB4
PB5
PB6
PB7
RESET
Vcc
Gnd
PA0
PA1
PA2
PA3
PA4
PA5
PA6
PA7
Aref
GND
AVCC
PC7
PC6
PC5
PC4
PC3
PC2
PC1
PC0
PD7
PD2
PD3
PD4
PD5
PD6
SDA
SCL
P1d2
LCD connector
K
A
E
RS
LCD Contrast
mini USB
FT232RL
3.3v
TXD
RXD
GND
www.x-sim.de
X-Sim 3 EDITION
Updated 16-4-2012

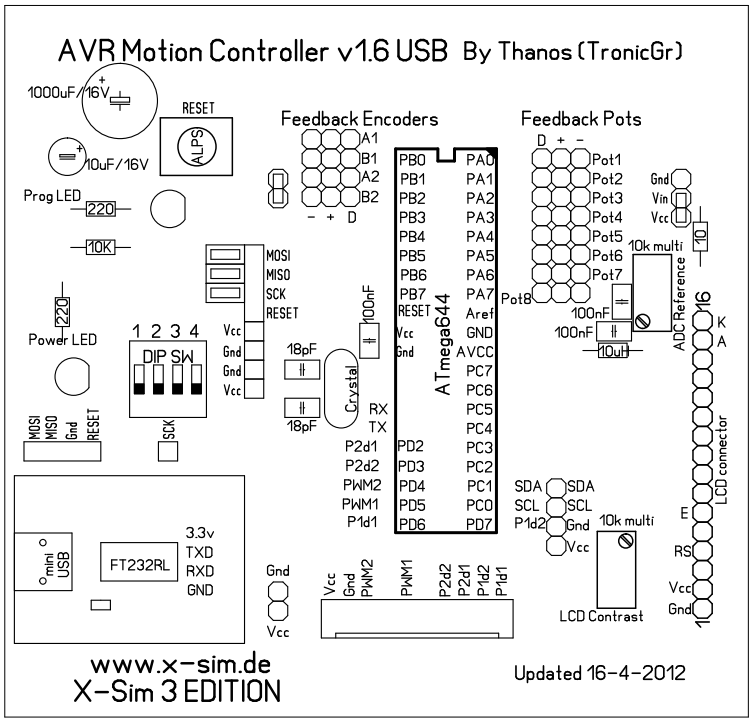
AVR Motion Controller v1.6 USB By Thanos (TronicGr)
1000uF/16V
10uF/16V
RESET
ALPS
Prog LED
220
10K
Power LED
Feedback Encoders
A1
B1
A2
B2
Feedback Pots
D + -
Pot1
Pot2
Pot3
Pot4
Pot5
Pot6
Pot7
Pot8
Gnd
Vin
Vcc
10k multi
ADC Reference
100nF
10uH
MOSI
MISO
SCK
RESET
1 2 3 4
DIP SW
18pF
Crystal
RX
TX
P2d1
P2d2
PWM2
PWM1
P1d1
ATmega644
PB0
PB1
PB2
PB3
PB4
PB5
PB6
PB7
RESET
Vcc
Gnd
PA0
PA1
PA2
PA3
PA4
PA5
PA6
PA7
Aref
GND
AVCC
PC7
PC6
PC5
PC4
PC3
PC2
PC1
PC0
PD7
PD2
PD3
PD4
PD5
PD6
SDA
SCL
P1d2
LCD connector
K
A
E
RS
LCD Contrast
mini USB
FT232RL
3.3v
TXD
RXD
GND
www.x-sim.de
X-Sim 3 EDITION
Updated 16-4-2012

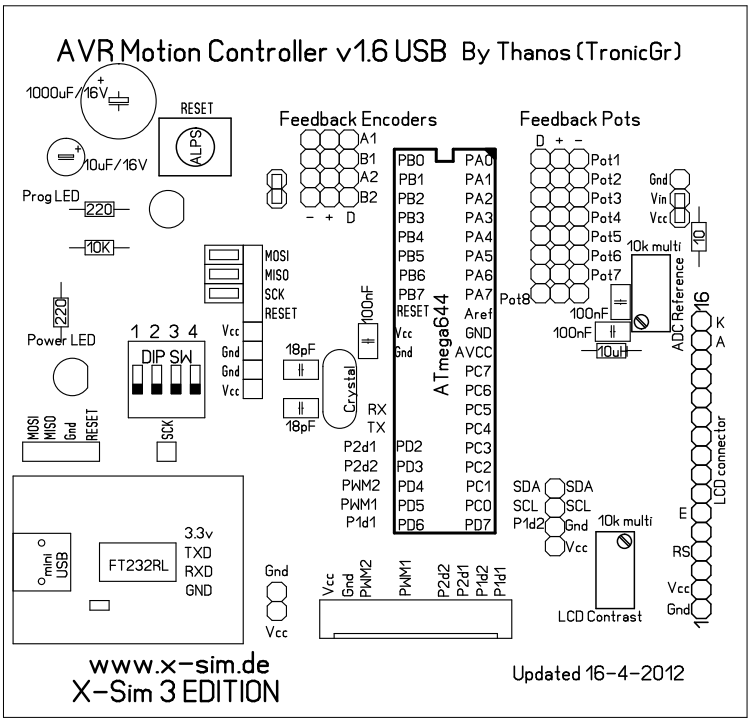
AVR Motion Controller v1.6 USB By Thanos (TronicGr)
1000uF/16V
10uF/16V
RESET
ALPS
Prog LED
220
10K
Power LED
Feedback Encoders
A1
B1
A2
B2
Feedback Pots
D + -
Pot1
Pot2
Pot3
Pot4
Pot5
Pot6
Pot7
Pot8
Gnd
Vin
Vcc
10k multi
ADC Reference
100nF
10uH
MOSI
MISO
SCK
RESET
1 2 3 4
DIP SW
18pF
Crystal
RX
TX
P2d1
P2d2
PWM2
PWM1
P1d1
ATmega644
PB0
PB1
PB2
PB3
PB4
PB5
PB6
PB7
RESET
Vcc
Gnd
PA0
PA1
PA2
PA3
PA4
PA5
PA6
PA7
Aref
GND
AVCC
PC7
PC6
PC5
PC4
PC3
PC2
PC1
PC0
PD7
PD2
PD3
PD4
PD5
PD6
SDA
SCL
P1d2
LCD connector
K
A
E
RS
LCD Contrast
mini USB
FT232RL
3.3v
TXD
RXD
GND
www.x-sim.de
X-Sim 3 EDITION
Updated 16-4-2012

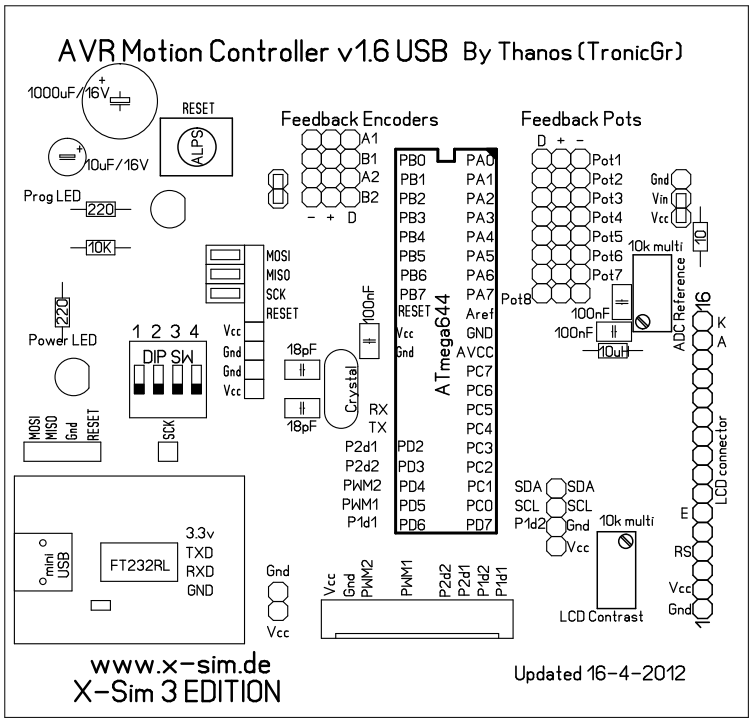
AVR Motion Controller v1.6 USB By Thanos (TronicGr)
1000uF/16V
10uF/16V
RESET
ALPS
Prog LED
220
10K
Power LED
Feedback Encoders
A1
B1
A2
B2
Feedback Pots
D + -
Pot1
Pot2
Pot3
Pot4
Pot5
Pot6
Pot7
Pot8
Gnd
Vin
Vcc
10k multi
ADC Reference
100nF
10uH
MOSI
MISO
SCK
RESET
1 2 3 4
DIP SW
18pF
Crystal
RX
TX
P2d1
P2d2
PWM2
PWM1
P1d1
ATmega644
PB0
PB1
PB2
PB3
PB4
PB5
PB6
PB7
RESET
Vcc
Gnd
PA0
PA1
PA2
PA3
PA4
PA5
PA6
PA7
Aref
GND
AVCC
PC7
PC6
PC5
PC4
PC3
PC2
PC1
PC0
PD7
PD2
PD3
PD4
PD5
PD6
SDA
SCL
P1d2
LCD connector
K
A
E
RS
LCD Contrast
mini USB
FT232RL
3.3v
TXD
RXD
GND
www.x-sim.de
X-Sim 3 EDITION
Updated 16-4-2012