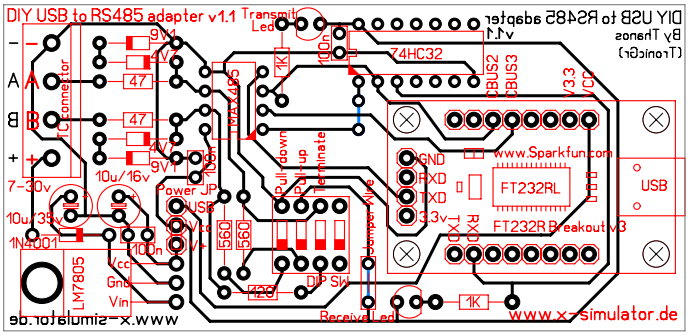
DIY USB to RS485 adapter v1.1
Transmit Led
74HC32
CBUS2
CBUS3
V3.3
VCC
www.Sparkfun.com
FT232RL
FT232R Breakout v3
USB
GND
RXD
TXD
3.3v
RXD
TXD
Pull down
Pull up
Terminate
Jumper Wire
DIP SW
Receive Led
1K
100n
560
120
Power JP
USB
Vcc
Gnd
Vin
LM7805
1N4001
10u/35v
10u/16v
7-30v
47
9V1
4V7
A
B
+
-
www.x-simulator.de