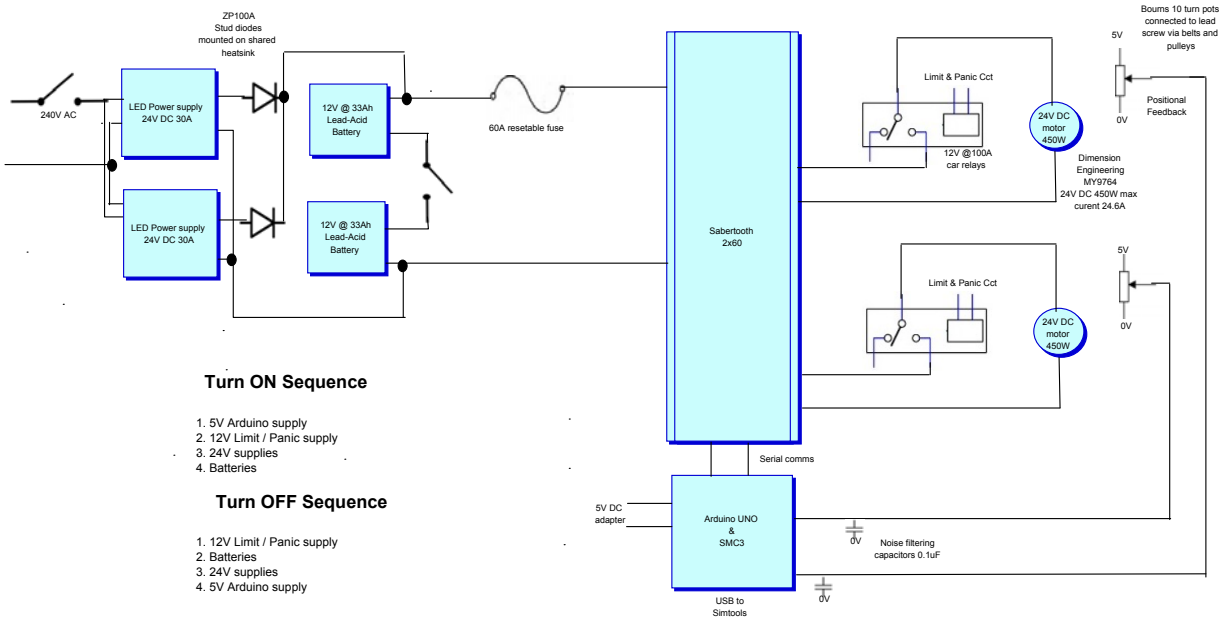

Turn ON Sequence

1. 5V Arduino supply
2. 12V Limit / Panic supply
3. 24V supplies
4. Batteries

Turn OFF Sequence
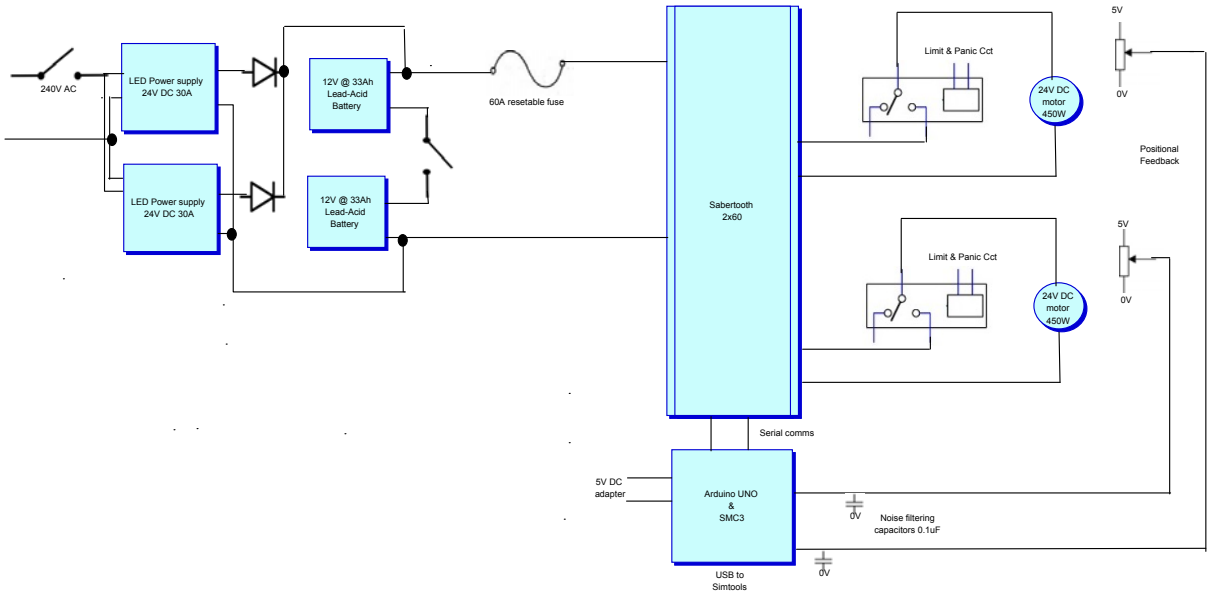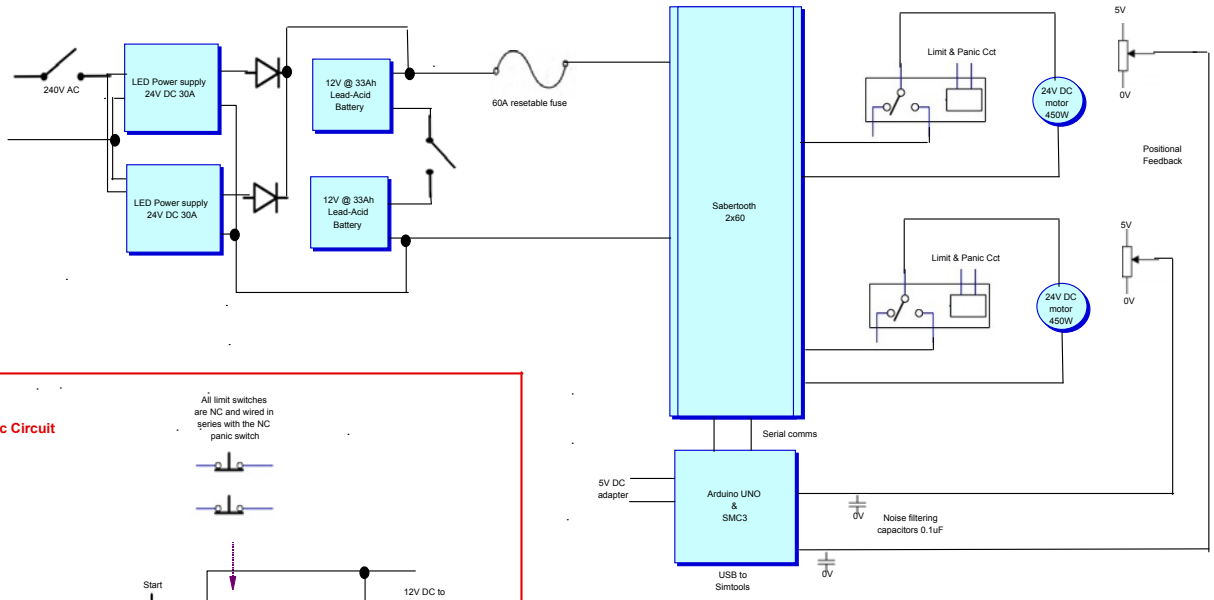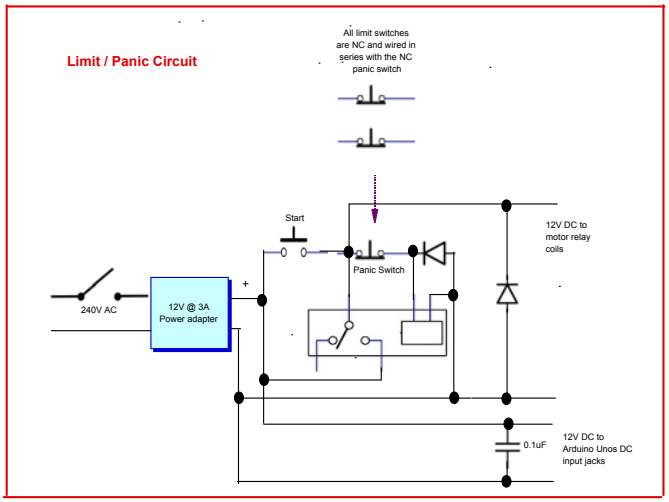
1. 12V Limit / Panic supply
2. Batteries
3. 24V supplies
4. 5V Arduino supply